2P Series Solenoid Valve

Symbol

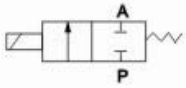

How to Order

2P - **025** - **06** - **AC110V**

- **2P**: 2P: Two-position Two-way
- **025**: 025:2.5mm
- **06**: Port connection
  06:1/8
  08:1/4
- **AC110V**: Voltage
  DC12V DC24V
  AC24V 50Hz/60Hz
  AC110V 50Hz/60Hz
  AC220V 50Hz/60Hz
  AC380V 50Hz/60Hz

Technical Data

Model	2P025-06		2P025-08	
Working Medium	Air, Water, Oil			
Acting type	Direct acting			
State when not actuated	Normally closed			
CV	0.23			
Port connection	G1/8	G1/4	G1/8	G1/4
Fluid viscosity	Below 20 CST			
Working pressure	0~0.7MPa			
Proof pressure	1.05MPa			
Operating temperature range	-5~+80℃			
Voltage range	±10%			
Power consumption	AC:7VA/50Hz,9VA/50Hz / DC:6W		AC:5VA/50Hz, / DC:5.5W	
Material of body	Plastic steel			
Seal material	NBR,EPDM or VITON			
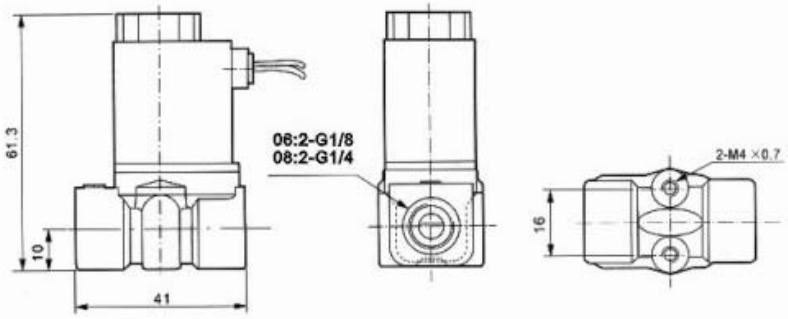
Dimensions(mm)